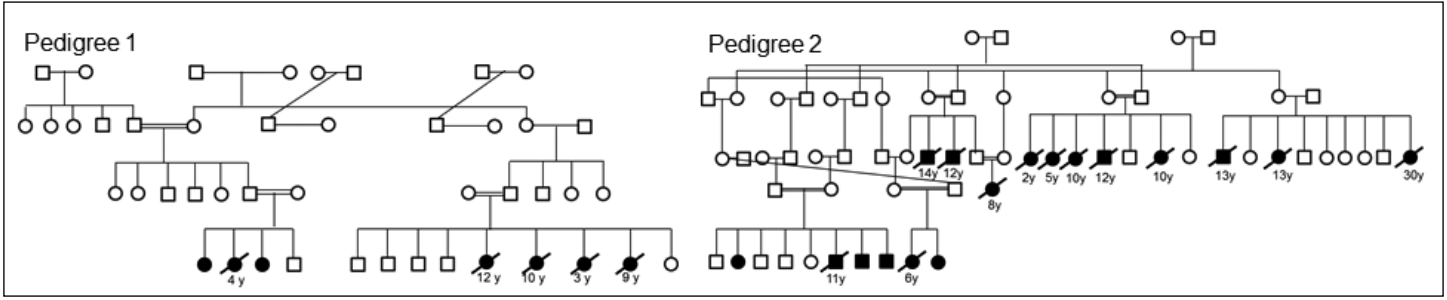

Figure. Pedigrees of two Amish families with homozygous tandem duplication of the RYR2 promoter location.